rbm	**AIRTERM** **IN-LINE DEAERATOR**	CT2830.0_00 EN April 2015

MAXIMUM DISCHARGE PRESSURE 10 bar

- Ensures system efficiency
- High discharge capacity.
- High performance (max. discharge pressure 10 bar).
- Bi-directional.

PRODUCTION RANGE

Code	Size	Connections
2830.04.00	1/2”	F UNI-EN-ISO 228
2830.05.00	3/4”	F UNI-EN-ISO 228
2830.06.00	1”	F UNI-EN-ISO 228
2830.07.00	1”1/4	F UNI-EN-ISO 228
2830.08.00	1”1/2	F UNI-EN-ISO 228
2830.09.00	2”	F UNI-EN-ISO 228
On request	Ø 22	Copper compression pipe
On request	Ø 28	Copper compression pipe

DESCRIPTION

THE PURPOSE:

RBM Airterm in-line deaerators are devices suitable for eliminating micro-bubbles from systems.
They are essentially made up of two parts:

- ACTIVE: The area where microbubbles are formed as a result of strong turbulence and swirling motion. Microbubbles blend together becoming bubbles.
- PASSIVE: Float-operated air vent valve to eliminate air bubbles.

Deaerators operate systems with air-depleted water, therefore able to absorb the air bubbles nestled in the system critical areas.

By removing air from the system, unnecessary breakdowns and malfunctions can be reduced, helping to:

- Increase heating and cooling efficiency
- Reduce the formation of corrosion in all points of the system
- Reduce extraordinary maintenance work
- Reduce the effects causing system noise
- Lower the cost of system management

USE:

RBM Airterm *in-line deaerators* are used in **heating and cooling systems**. They ensure eliminating the air that is continuously formed in systems. For more specifications, please see the "USE / INSTALLATION" section of this data sheet.

CAUTIONS:

To be always installed in a vertical position (on horizontal pipes), with the air discharge device facing upwards.

CONSTRUCTION FEATURES

• Body:	Brass CW 617N UNI EN 12165
• Elastomers used:	EPDM and NBR
• Float:	With levers, made of polypropylene resin
• Cartridge:	AISI 302 stainless steel
• Spring:	AISI 302 stainless steel
• Connections:	F UNI-EN-ISO-228 / Compression connection for copper pipe (depending on version)

TECHNICAL FEATURES

• Usable fluid:	Water Water + Glycol 30%
• Maximum fluid temperature:	110°C
• Maximum operating pressure:	10 bar (1000 kPa)
• Maximum discharge pressure:	10 bar (1000 kPa)

DIMENSIONAL FEATURES

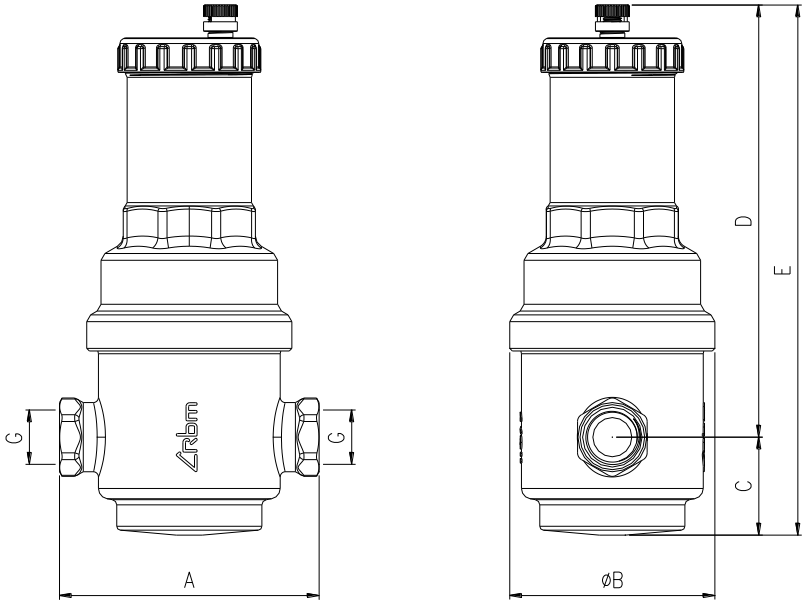

Code	G	A [mm]	Ø B [mm]	C [mm]	D [mm]	E [mm]
2830.04.00	1/2”	100	79	37,5	165,5	203
2830.05.00	3/4”	105	79	37,5	165,5	203
2830.06.00	1”	110	79	37,5	165,5	203
2830.07.00	1”1/4	115	79	37,5	165,5	203
2830.08.00	1”1/2	120	88	47	171,5	218,5
2830.09.00	2”	125	88	47	171,5	218,5
On request	Ø 22	125	79	37,5	165,5	203
On request	Ø 28	130	79	37,5	165,5	203

STRENGTHS / WORKING PRINCIPLE

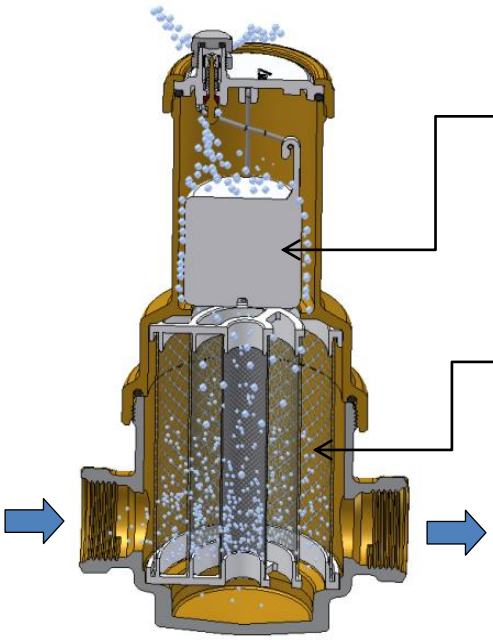

PASSIVE PART: Megaluft
High-performance air vent valve
(discharge guaranteed up to 10 bar).

INNOVATIVE RBM 3-layer CARTRIDGE
Made up of 3 **stainless steel** sheets with different filtering grades. Stainless steel is **an outstanding guarantee of durability** and maximum reliability under varying pressure and temperature conditions. With respect to any other possible choice, this is certainly the one with greater resistance to corrosion and wear generated by impurities (whose nature is less and less predictable).
The cartridge is directly hit by the flow; continuous section variations contribute creating swirling motion that favours the release of **microbubbles**; however, it offers little resistance to the passage of the flow (characterised by **very low head loss**).
These microbubbles settle on the internal metal cage and, after reaching an adequate size, they move upwards and are ejected by the passive part of the device.

FLUID DYNAMICS FEATURES

Flow rate diagram - pressure drop

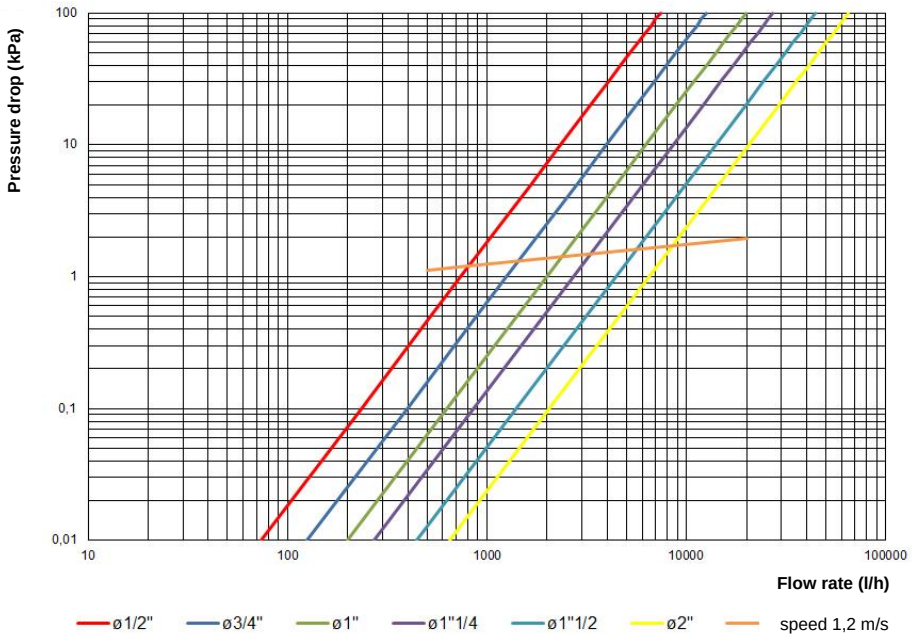

Size	1/2"	3/4" - ø22	1" - ø28	1"1/4	1"1/2	2"
Kv (m^3/h)	7.40	12.66	20.44	28.14	44.45	65.58

It is recommended to keep the maximum speed of the fluid in the pipe within the value of 1.2 m/s. Higher speeds may impair the proper operation of the air discharge device.

The table below shows the flow rates to meet the recommended speed of 1.2 m/s.

DN	Size	l/min.	m^3/h
15	1/2"	13,2	0,79
20	3/4" - ø22	22,8	1,37
25	1" - ø28	35,4	2,12
32	1"1/4	58,2	3,49
40	1"1/2	90,6	5,44
50	2"	141,6	8,50

Discharge capacity diagram

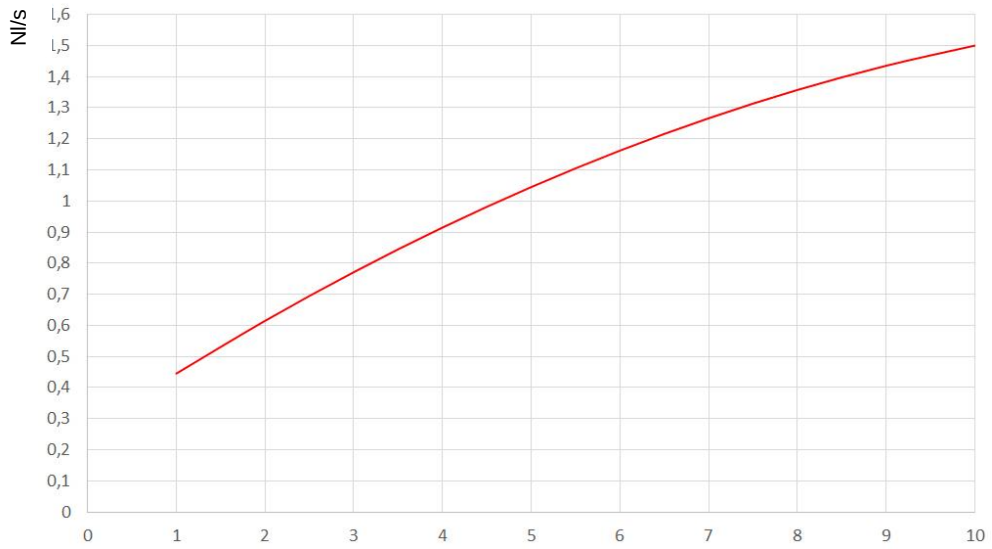

USE / INSTALLATION

Airterm **deaerators operate systems with air-depleted water**, therefore they are able to absorb the air bubbles nestled in the system critical areas.
They can be used in **heating and cooling systems**. They ensure eliminating the air that is continuously formed in systems.

- To **be installed on the system warmest side**, as it is the area in which microbubbles form more.
Install them at the boiler output in case of heating systems; in the case of cooling systems, they must be installed on the return piping, at the cooling unit inlet (chillers).

They are are also commonly used upstream of circulators.

- Install **shut-off valves** upstream and downstream of the filter, in order to allow scheduled maintenance work and filter cleaning to be performed

- *Airterm* is a **bi-directional component**, therefore it has the same efficiency irrespective of the direction of the flow running through it. Screw the discharge valve to the bottom of the filter.

- In order to function properly, the *Airterm* deaerator must be installed in a **vertical position (on horizontal pipes)**, with the air discharge device facing upwards.

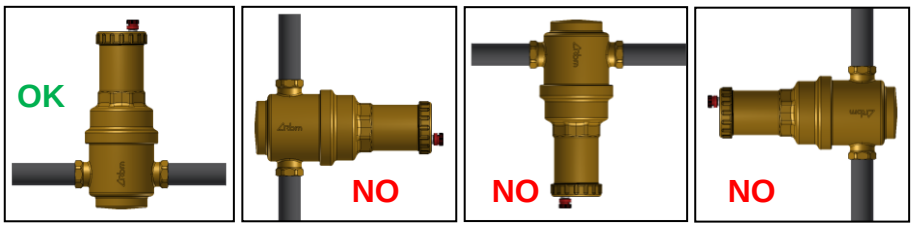

APPLICATION DIAGRAMS

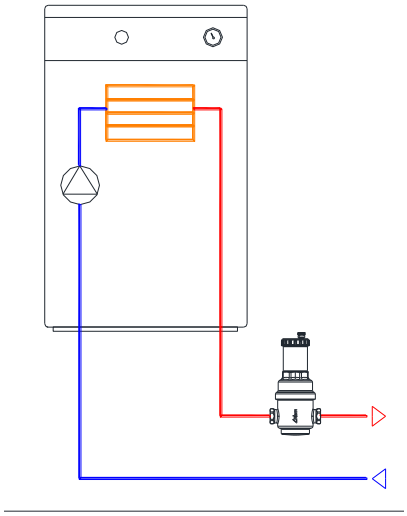

Diagram 1: *Airterm* installed on the system delivery pipe.

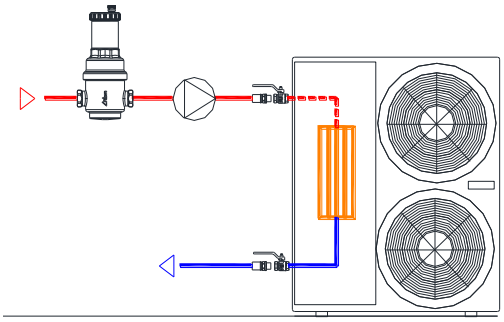

Diagram 2: *Airterm* installed on the system return pipe, at the cooling unit inlet.

MAINTENANCE INTERVENTIONS

Airterm has been designed in such a way that it can be dismantled and serviced.
For cleaning operations, both the air discharge device and the cartridge can be easily accessed.
During these operations, the separator body remains always installed on the system.

By simply unscrewing the upper ring nut, it is possible to access the air discharge device to check its functionality and perform any maintenance work.

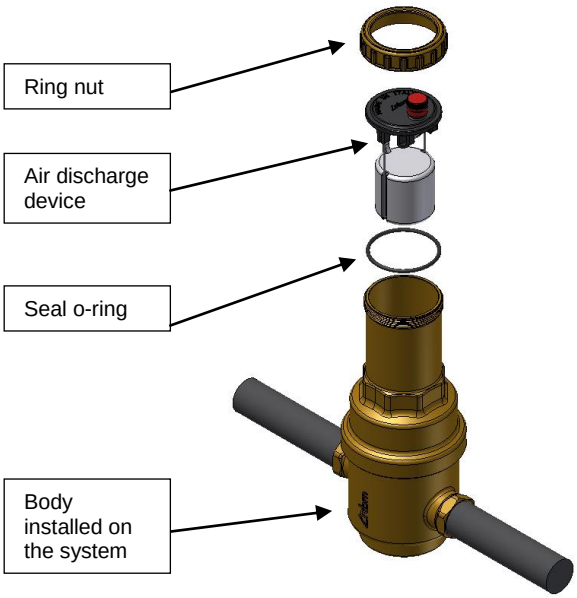

By just unscrewing the upper bell that contains the air vent device, the RBM 3-layer cartridge can be accessed to perform any cleaning.

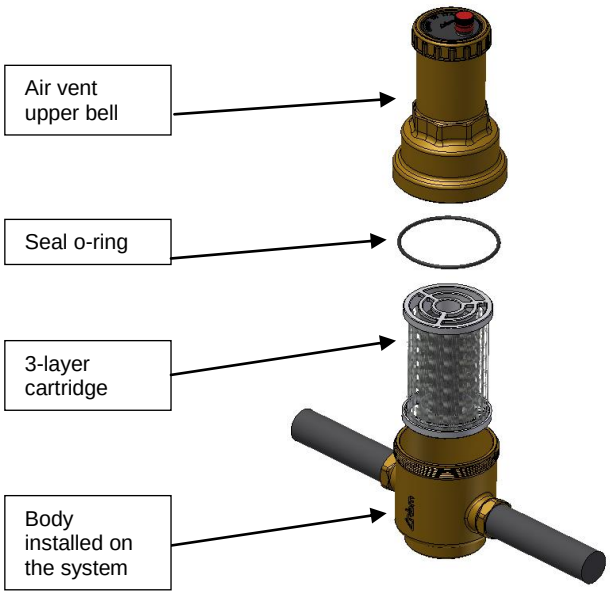

SPECIFICATION ITEMS

SERIES 2830
In-line deaerator for horizontal pipes model *Airterm*. Brass body. PP float. Float guide and brass rod. Float lever and stainless steel spring. AISI 304 steel 3-layer filtering cartridge. EPDM hydraulic seals. Threaded connections FF UNI-EN-ISO 228 (or compression ones for copper pipe). Maximum operating pressure 10 bar. Max. discharge pressure 10 bar. Maximum operating temperature 110° C. Available sizes 1/2" ÷ 2" (or compression for copper pipe ø22 and ø 28).

RBM spa reserves the right to improve and change the described products and related technical data at any moment and without prior notice: always refer to the instructions attached with the supplied components; this sheet is an aid, should the instructions be extremely schematic. Our technical department is always at your disposal for any doubt, problem or clarification.

RBM Spa
Via S.Giuseppe, 1
25075 Nave (Brescia) Italy
Tel. 030-2537211 Fax 030-2531798
E-mail: info@rbm.eu – www.rbm.eu